THERMA-TRU DOORS

Classic-Craft®

"SHAKER"
OPAQUE FIBERGLASS SINGLE DOOR
w/ SIDELITE(S)

INSWING/OUTSWING
"NON-IMPACT"

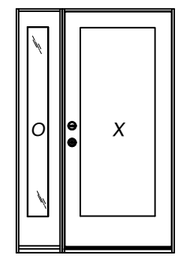

OX

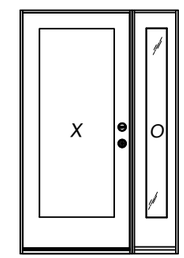

XO

L F SCHMIDT LICENSE No. 43409 STATE OF FLORIDA PROFESSIONAL ENGINEER

Digitally signed by Lyndon F Schmidt
Date: 2023.07.27 16:31:50 -04'00'

This item has been digitally signed and sealed by **L. F. Schmidt, P.E.** on the date adjacent to the seal.

Printed copies of this document are not considered signed and sealed and the signature must be verified on any electronic copies.

THIS PRODUCT APPROVAL IS VALID ONLY FOR THE STATE OF FLORIDA

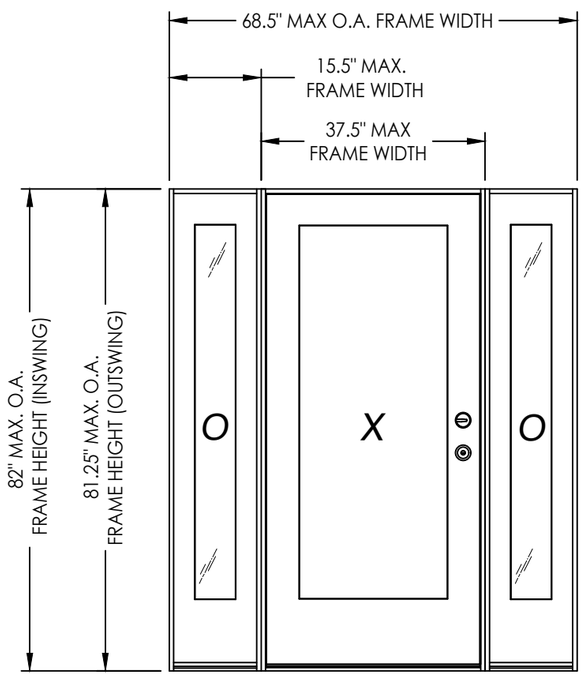

GENERAL NOTES

1. This product has been evaluated and is in compliance with the 8th Edition (2023) Florida Building Code (FBC) structural requirements excluding the "High Velocity Hurricane Zone" (HVHZ).
2. Product anchors shall be as listed and spaced as shown on details. Anchor embedment to base material shall be beyond wall dressing or stucco.
3. When used in areas requiring wind borne debris protection, this product is required to be protected with an impact resistant covering that complies with FBC Sections 1609.1.2 & R301.2.1.2.
4. For 2x stud framing construction, anchoring of these units shall be the same as that shown for 2x buck masonry construction.
5. Site conditions that deviate from the details of this drawing require further engineering analysis by a licensed engineer or registered architect.

TABLE OF CONTENTS

SHEET #	DESCRIPTION
1	Typical Elevations, Design Pressures & General Notes
2	Door Panel Details
3	Sidelite Panel Details
4	Elevations
5	Horizontal Cross Sections (2X Buck)
6	Vertical Cross Sections (2X Buck)
7	Horizontal & Vertical Cross Sections (1X Buck)
8	Vertical Cross Sections (Thresholds)
9	Buck Anchoring
10	Frame Anchoring
11	Hardware Details
12	Bill of Materials and components

CONFIGURATION	LOCK HARDWARE	DESIGN PRESSURE (PSF) INSWING		DESIGN PRESSURE (PSF) OUTSWING	
		POSITIVE	NEGATIVE	POSITIVE	NEGATIVE
XO, OX, OXO	Latch & Deadbolt	+60.0	-67.0	+65.0	-65.0
XO, OX, OXO	Multipoint	+70.0	-70.0	+70.0	-70.0

Documents Prepared By:
Lyndon F. Schmidt
P.E. No. 43409

RW BUILDING CONSULTANTS, INC.
P.O. Box 230, Valrico, FL 33595
Phone No.: 813.659.9197
FBPE Registry No. 9813

PRODUCT: THERMA-TRU FIBERGLASS DOOR

PART OR ASSEMBLY: TYPICAL ELEVATION, DESIGN PRESSURES & GENERAL NOTES

REVISIONS

NO.	DATE	BY
2	7/27/23	UPDATE TO 8TH ED. (2023) FBC	LFS
1	7/15/20	UPDATE TO 7th ED (2020) FBC	LFS

DATE: 2/11/19
SCALE: N.T.S.
DWG. BY: MT
CHK. BY: LFS
DRAWING NO.: FL-28897.8
SHEET 1 OF 12

© 2019 R.W. BUILDING CONSULTANTS INC.

Z:\2023 FBC Drawings\Therma-Tru\FL-28897 R2\FL-28897.7-9.dwg

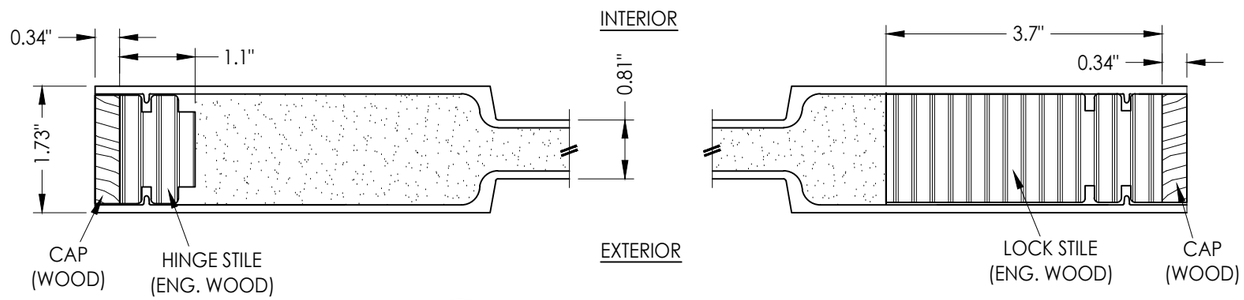

1/2 **HORIZONTAL CROSS SECTION**

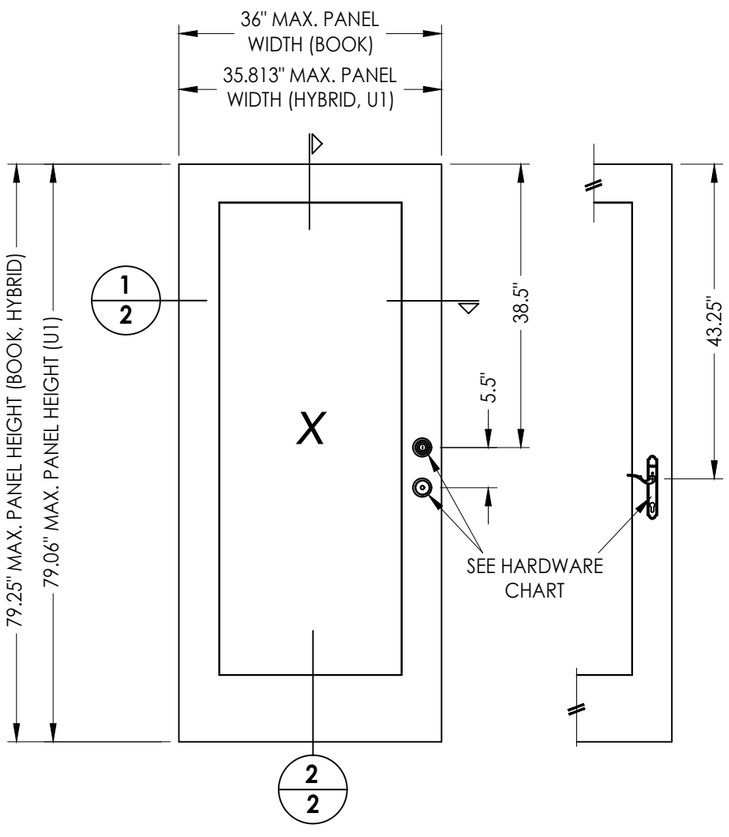

40 **DOOR PANEL**
Classic-Craft Shaker

FIBERGLASS SKIN: 0.110" MIN. THICKNESS
FOAM CORE: POLYURETHANE (1.9 PCF)

HARDWARE TABLE		
MANUFACTURER	MODEL	
KWIKSET	KNOB:	SIGNATURE SERIES
	DEADBOLT:	SIGNATURE SERIES (980)
SCHLAGE	KNOB:	F SERIES (F10)
	DEADBOLT:	B SERIES (B60)
HOPPE (Therma-Tru)	MULTIPOINT LOCK: MPDGART (3 pt. Manual Tongue)	

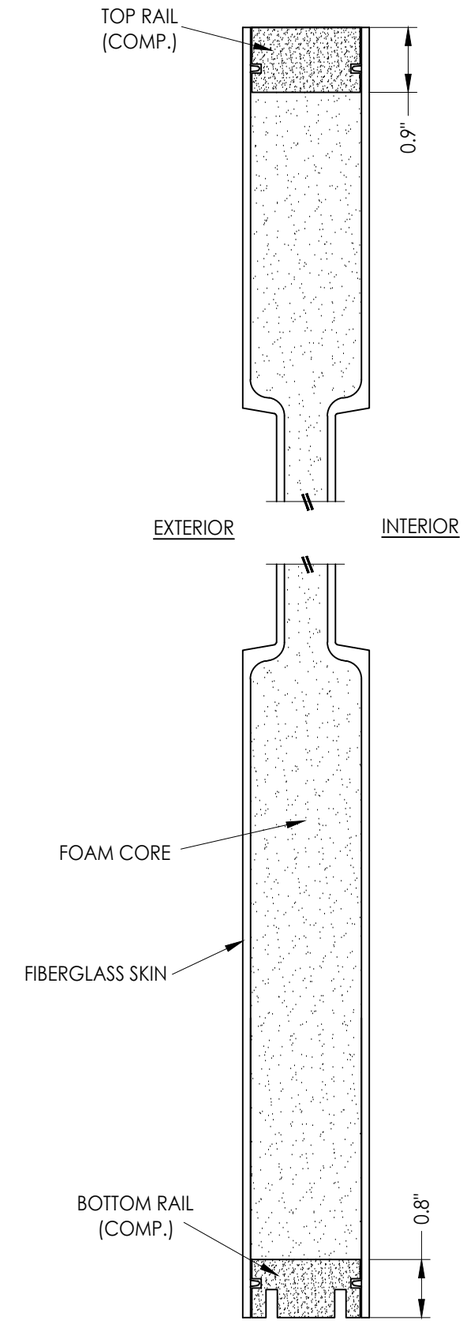

2/2 **VERTICAL CROSS SECTION**

Documents Prepared By:
Lyndon F. Schmidt
P.E. No. 43409
RW BUILDING CONSULTANTS, INC.
P.O. Box 230, Valrico, FL 33595
Phone No.: 813.659.9197
FBPE Registry No. 9813

PRODUCT: THERMA-TRU FIBERGLASS DOOR

PART OR ASSEMBLY: DOOR PANEL DETAILS

NO.	DATE		BY
2	7/27/23	UPDATE TO 8TH ED. (2023) FBC	LFS
1	7/15/20	UPDATE TO 7th ED (2020) FBC	LFS

REVISIONS

DATE: 2/11/19
SCALE: N.T.S.
DWG. BY: MT
CHK. BY: LFS
DRAWING NO.: FL-28897.8
SHEET 2 OF 12

© 2019 R.W. Building Consultants Inc.

Z:\2023 FBC Drawings\Therma-Tru\FL-28897 R2\FL-28897.7-9.dwg

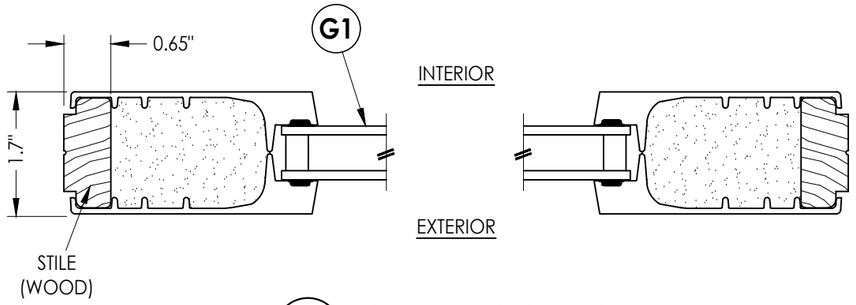

1/3 **HORIZONTAL CROSS SECTION**

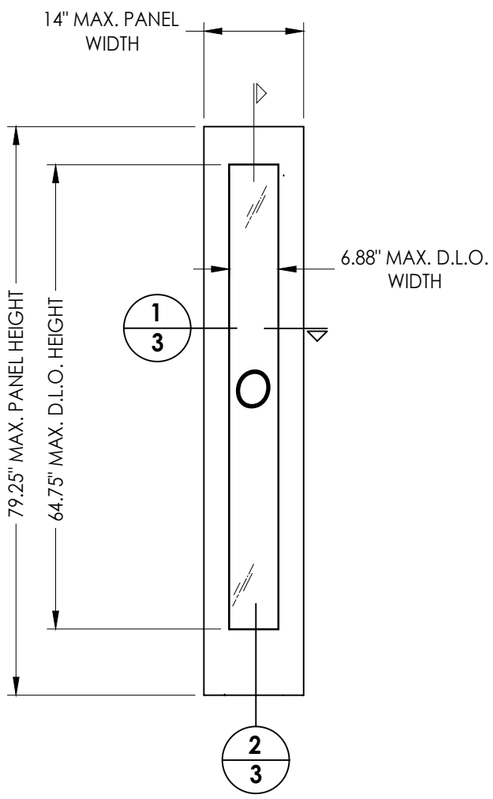

50 **SIDELITE PANEL**
Classic-Craft Shaker

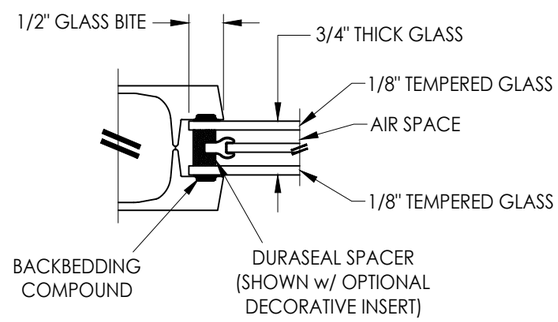

G1 **GLAZING DETAIL**
Flush Glazing

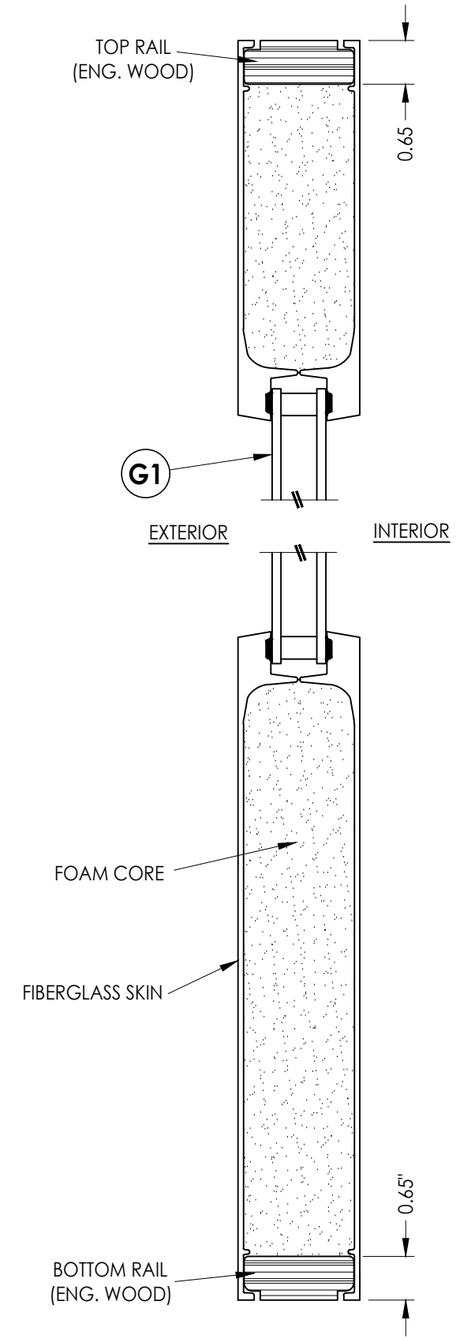

2/3 **VERTICAL CROSS SECTION**

FIBERGLASS SKIN: 0.08" MIN. THICKNESS
FOAM CORE: POLYURETHANE (1.9 PCF)

Documents Prepared By:
Lyndon F. Schmidt
P.E. No. 43409
RW BUILDING CONSULTANTS, INC.
P.O. Box 230, Valrico, FL 33595
Phone No.: 813.659.9197
FBPE Registry No. 9813

PRODUCT: THERMA-TRU FIBERGLASS DOOR

PART OR ASSEMBLY: SIDELITE PANEL DETAILS

NO.	DATE	REVISIONS	BY
2	7/27/23	UPDATE TO 8TH ED. (2023) FBC	LFS
1	7/15/20	UPDATE TO 7th ED (2020) FBC	LFS

DATE: 2/11/19
SCALE: N.T.S.
DWG. BY: MT
CHK. BY: LFS
DRAWING NO.: FL-28897.8
SHEET 3 OF 12

© 2012 R.W. Building Consultants Inc.

Z:\2023 FBC Drawings\Therma-Tru\FL-28897 R2\FL-28897.7-9.dwg

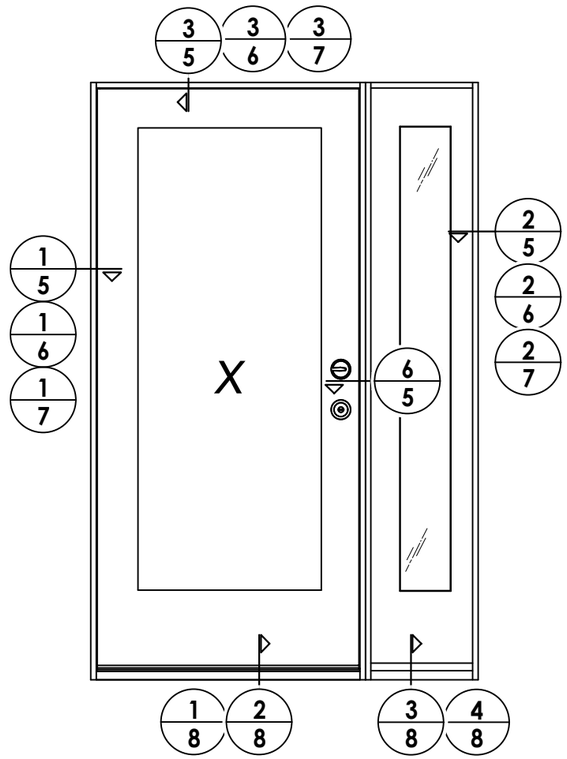

ELEVATION
XO

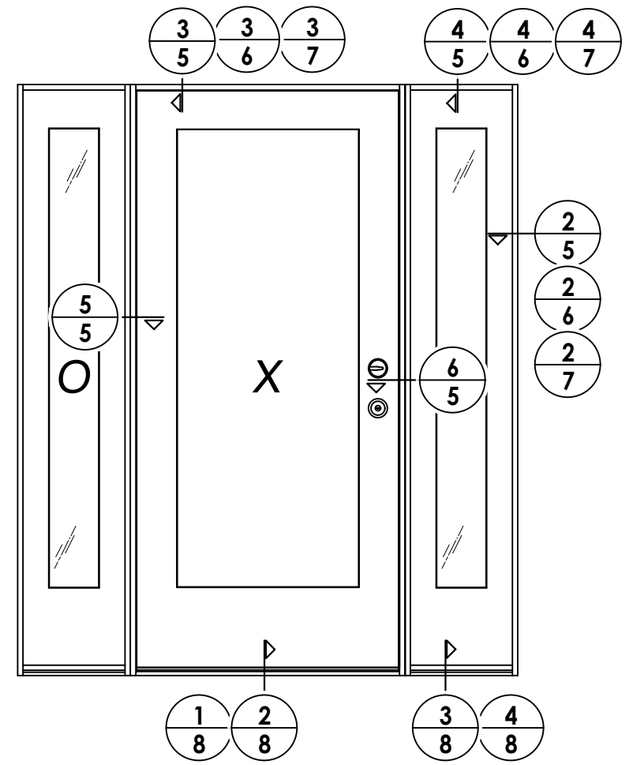

ELEVATION
OXO

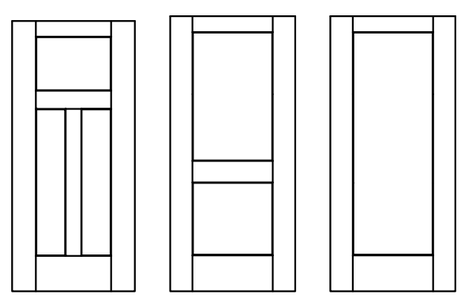

Classic-Craft Shaker Door Panel Options

Panel options shown are for illustration and are representative only
(similar opaque panel configurations are allowed)

Documents Prepared By:
Lyndon F. Schmidt
P.E. No. 43409

R.W. BUILDING CONSULTANTS, INC.
P.O. Box 230, Valrico, FL 33595
Phone No.: 813.659.9197
FBPE Registry No. 9813

PRODUCT: THERMA-TRU FIBERGLASS DOOR

PART OR ASSEMBLY: ELEVATIONS

REVISIONS

NO.	DATE		BY
2	7/27/23	UPDATE TO 8TH ED. (2023) FBC	LFS
1	7/15/20	UPDATE TO 7th ED (2020) FBC	LFS

DATE: 2/11/19
SCALE: N.T.S.
DWG. BY: MT
CHK. BY: LFS
DRAWING NO.: FL-28897.8
SHEET 4 OF 12

© 2019 R.W. BUILDING CONSULTANTS INC.

Z:\2023 FBC Drawings\Therma-Tru\FL-28897 R2\FL-28897.7-9.dwg

Notes:
1. Sidelite assembly screws located 8" from each end then 2 more equally spaced (4 total).
2. Sidelite assembly screws located 6" from each end (2 total).

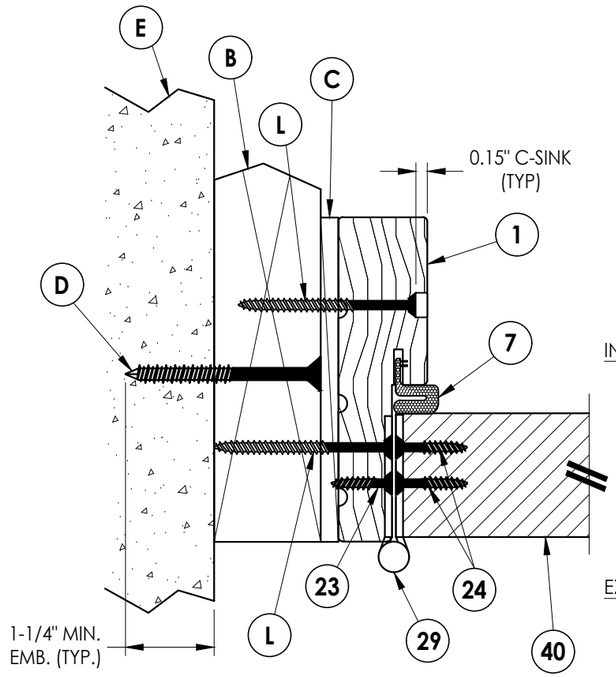

1/5 **HORIZONTAL CROSS SECTION**
Shown w/ 2X Buck
Outswing shown (Inswing similar)

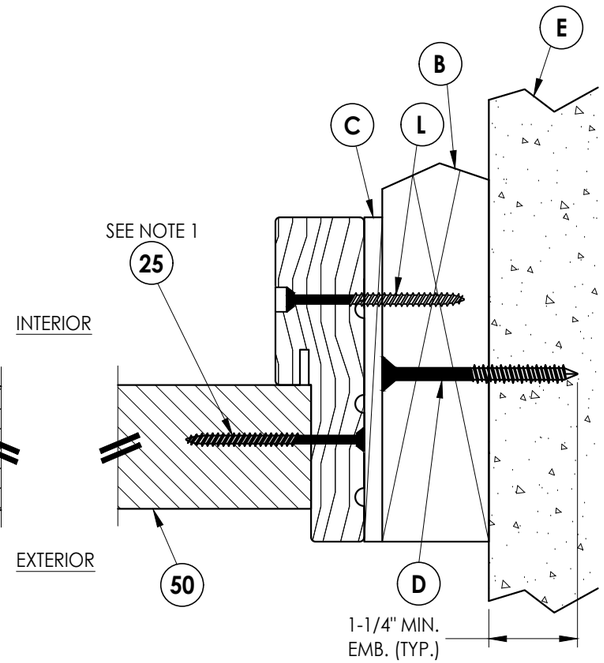

2/5 **HORIZONTAL CROSS SECTION**
Shown w/ 2X Buck
Outswing shown (Inswing similar)

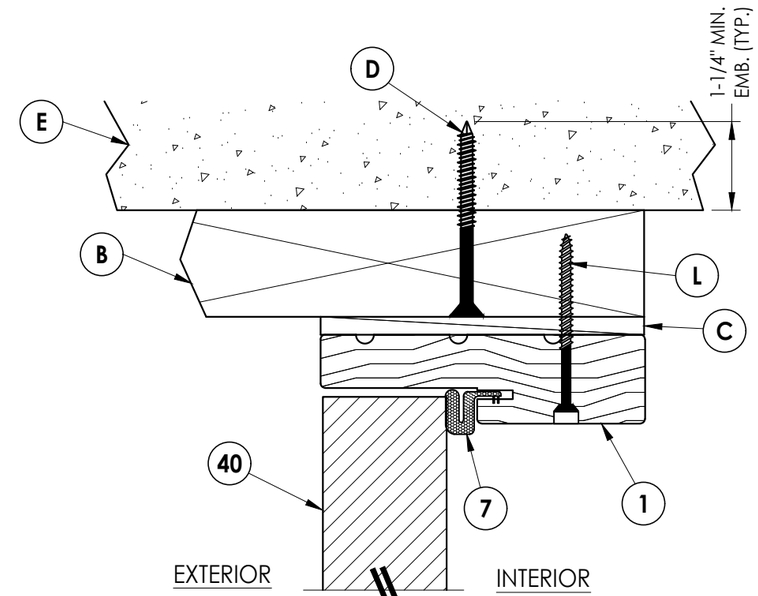

3/5 **VERTICAL CROSS SECTION**
Shown w/ 2X Buck
Outswing shown (Inswing similar)

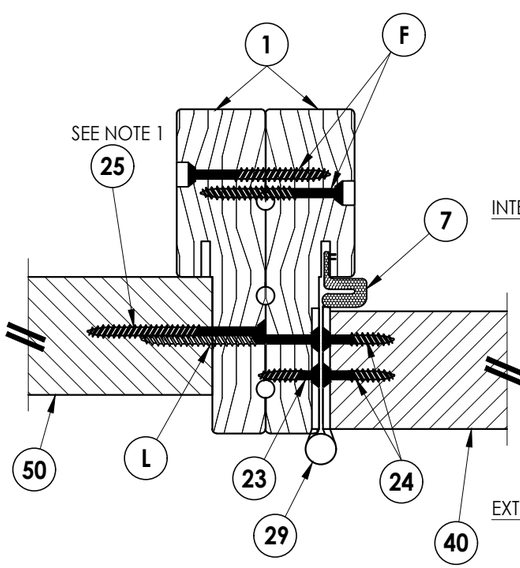

5/5 **HORIZONTAL CROSS SECTION**
Outswing shown (Inswing similar)

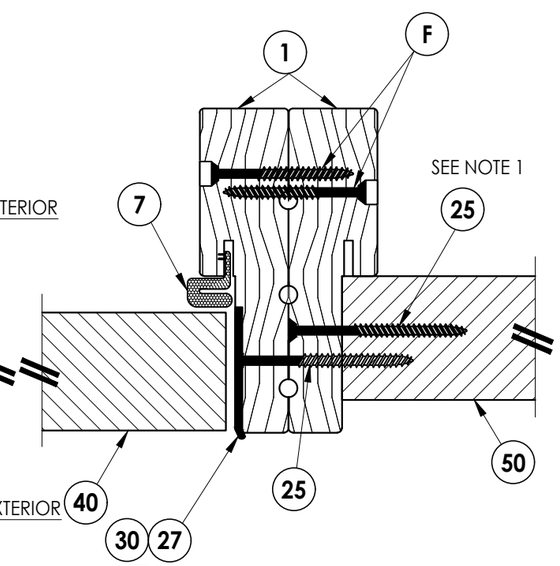

6/5 **HORIZONTAL CROSS SECTION**
Outswing shown (Inswing similar)

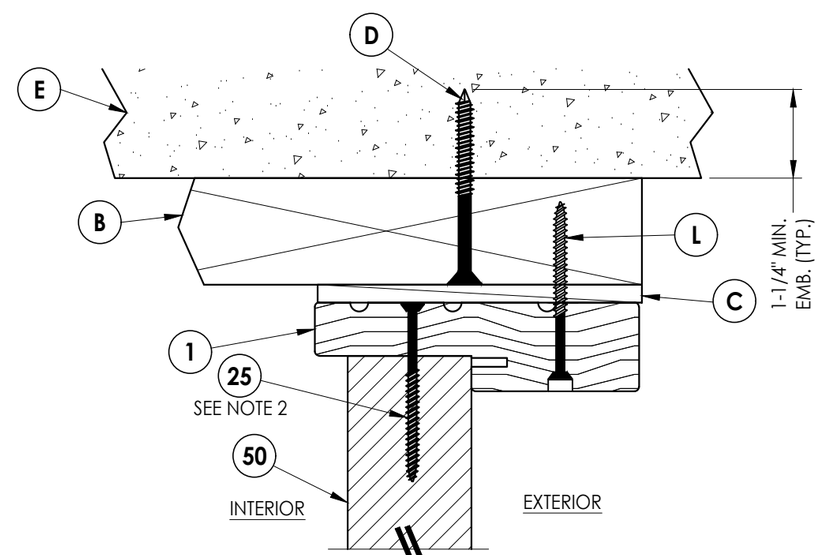

4/5 **VERTICAL CROSS SECTION**
Shown w/ 2X Buck

Documents Prepared By:
Lyndon F. Schmidt
P.E. No. 43409

RW BUILDING CONSULTANTS, INC.
P.O. Box 230, Valrico, FL 33595
Phone No.: 813.659.9197
FBPE Registry No. 9813

PRODUCT: THERMA-TRU FIBERGLASS DOOR

PART OR ASSEMBLY: HORIZONTAL & VERTICAL CROSS SECTIONS (2X BUCK)

REVISIONS

NO.	DATE		BY
2	7/27/23	UPDATE TO 8TH ED. (2023) FBC	LFS
1	7/15/20	UPDATE TO 7th ED (2020) FBC	LFS

DATE: 2/11/19
SCALE: N.T.S.
DWG. BY: MT
CHK. BY: LFS
DRAWING NO.: FL-28897.8
SHEET 5 OF 12

© 2012 R.W. BUILDING CONSULTANTS INC.

Z:\2023 FBC Drawings\Therma-Tru\FL-28897 R2\FL-28897.7-9.dwg

Notes:
1. Sidelite assembly screws located 8" from each end then 2 more equally spaced (4 total).
2. Sidelite assembly screws located 6" from each end (2 total).

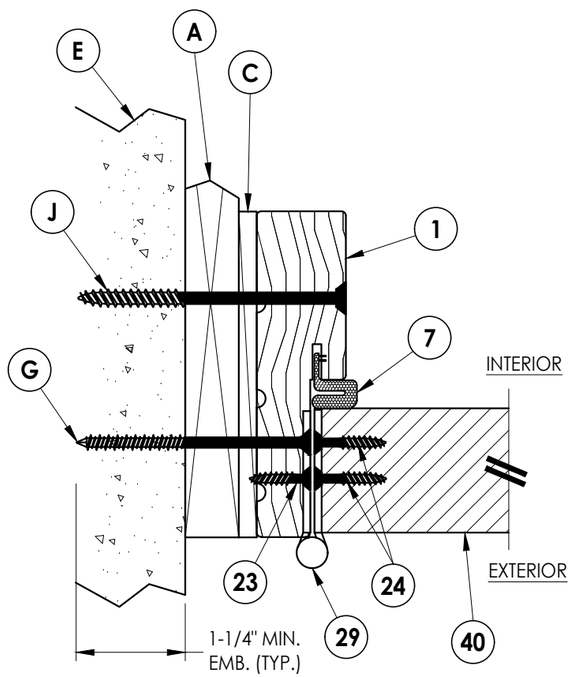

1/6 **HORIZONTAL CROSS SECTION**
Shown w/ 1X sub-buck
Outswing shown (Inswing similar)

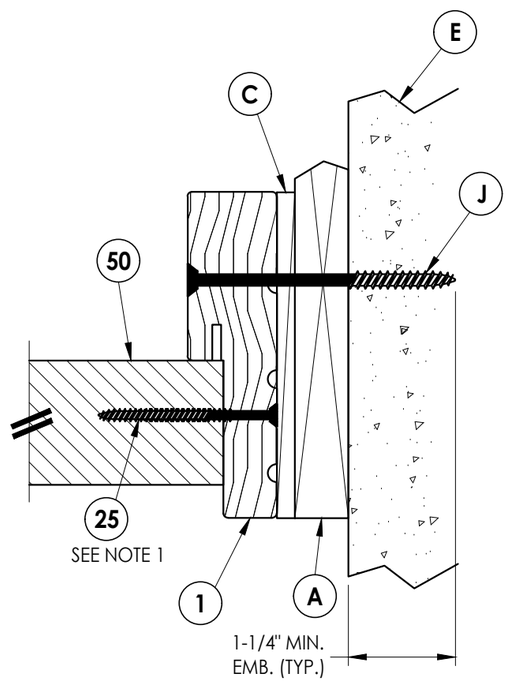

2/6 **HORIZONTAL CROSS SECTION**
Shown w/ 1X sub-buck
Outswing shown (Inswing similar)

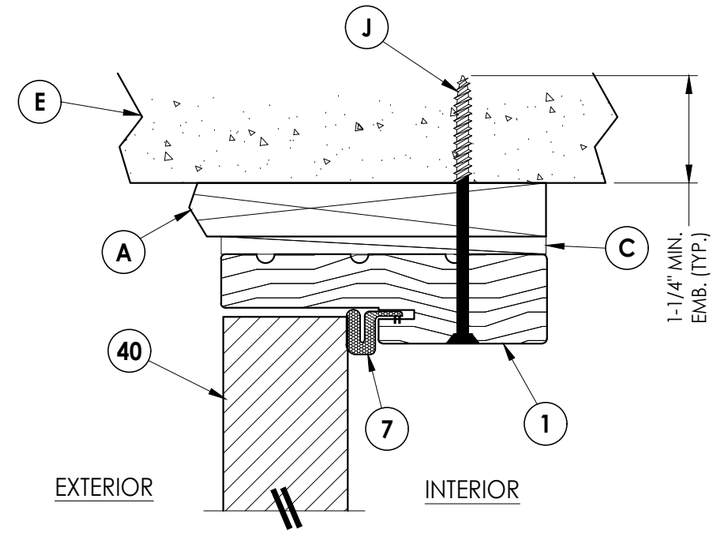

3/6 **VERTICAL CROSS SECTION**
Shown w/ 1X sub-buck
Outswing shown (Inswing similar)

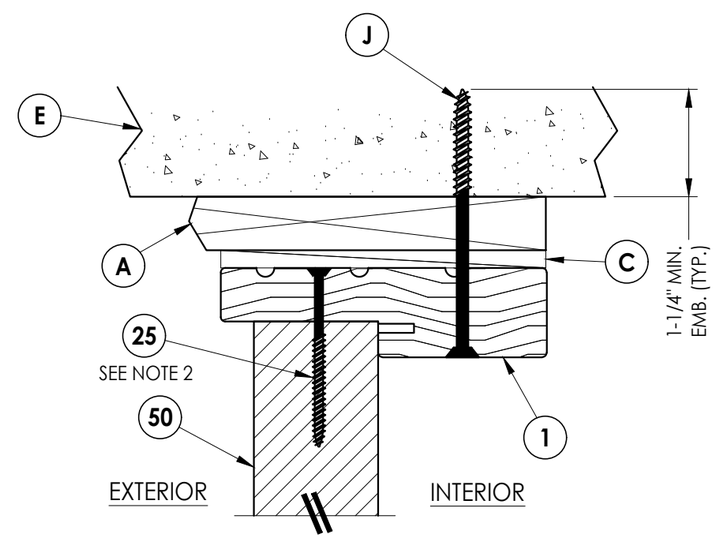

4/6 **VERTICAL CROSS SECTION**
Shown w/ 1X sub-buck
Outswing shown (Inswing similar)

Documents Prepared By:
Lyndon F. Schmidt
P.E. No. 43409
RCW BUILDING CONSULTANTS, INC.
P.O. Box 230, Valrico, FL 33595
Phone No.: 813.659.9197
FBPE Registry No. 9813

PRODUCT: THERMA-TRU FIBERGLASS DOOR

PART OR ASSEMBLY: HORIZONTAL & VERTICAL CROSS SECTIONS (1X BUCK)

REVISIONS

NO.	DATE		BY
2	7/27/23	UPDATE TO 8TH ED. (2023) FBC	LFS
1	7/15/20	UPDATE TO 7th ED (2020) FBC	LFS

DATE: 2/11/19
SCALE: N.T.S.
DWG. BY: MT
CHK. BY: LFS
DRAWING NO.: FL-28897.8
SHEET 6 OF 12

© 2019 R.W. Building Consultants Inc.

Z:\2023 FBC Drawings\Therma-Tru\FL-28897 R2\FL-28897.7-9.dwg

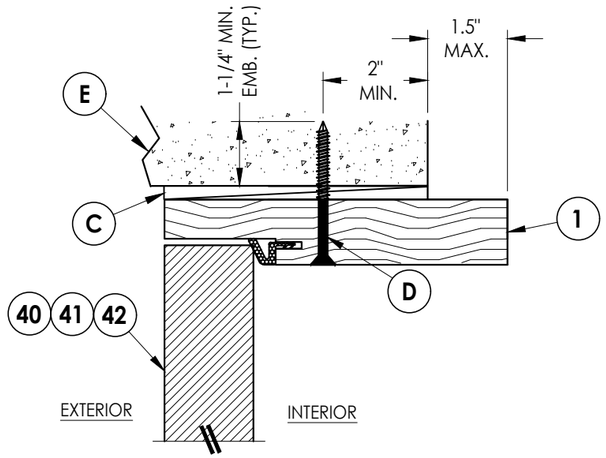

3/7 HORIZONTAL CROSS SECTION
Shown Direct to Masonry
Outswing only w/ 6-9/16" jamb

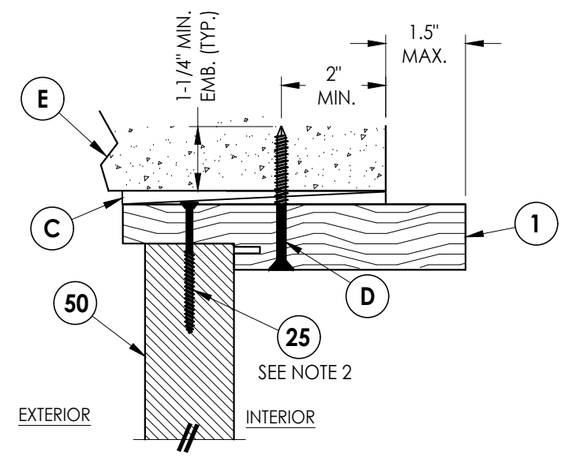

4/7 VERTICAL CROSS SECTION
Shown Direct to Masonry
Outswing only w/ 6-9/16" jamb

Notes:
1. Sidelite assembly screws located 8" from each end then 2 more equally spaced (4 total).
2. Sidelite assembly screws located 6" from each end (2 total).

DIRECT TO MASONRY MAX. DESIGN PRESSURE:
± 65 PSF

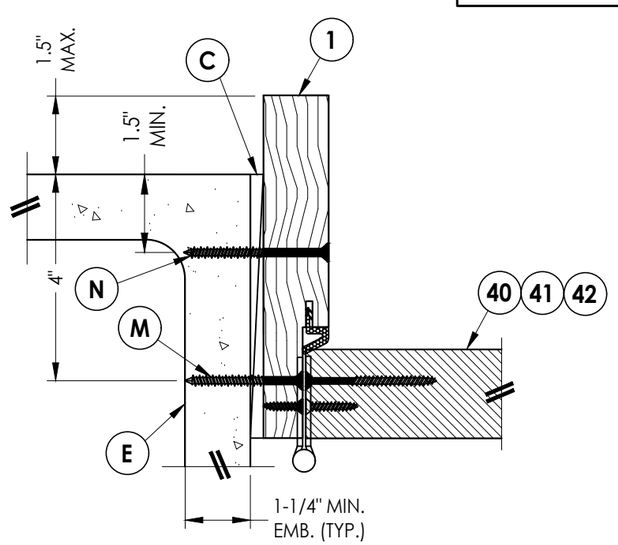

1/7 HORIZONTAL CROSS SECTION
Shown Direct to Masonry
Outswing only w/ 6-9/16" jamb

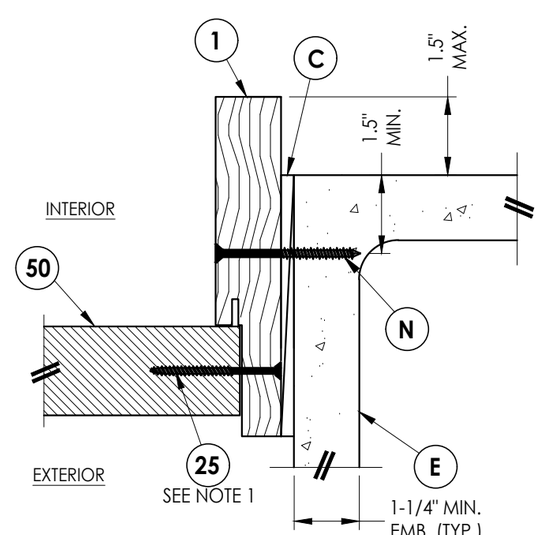

2/7 VERTICAL CROSS SECTION
Shown Direct to Masonry
Outswing only w/ 6-9/16" jamb

Documents Prepared By:
Lyndon F. Schmidt
P.E. No. 43409
RW BUILDING CONSULTANTS, INC.
P.O. Box 230, Valrico, FL 33595
Phone No.: 813.659.9197
FBPE Registry No. 9813

PRODUCT: THERMA-TRU FIBERGLASS DOOR

PART OR ASSEMBLY: HORIZONTAL & VERTICAL SECTIONS (DIRECT TO MASONRY)

NO.	DATE	REVISIONS	BY
2	7/27/23	UPDATE TO 8TH ED. (2023) FBC	LFS
1	7/15/20	UPDATE TO 7th ED (2020) FBC	LFS

DATE: 2/11/19
SCALE: N.T.S.
DWG. BY: MT
CHK. BY: LFS
DRAWING NO.: FL-28897.8
SHEET 7 OF 12

© 2016 R.W. Building Consultants Inc.

Z:\2023 FBC Drawings\Therma-Tru\FL-28897 R2\FL-28897.7-9.dwg

Note:
1. Sidelite assembly screws located 6" from each end (2 total).

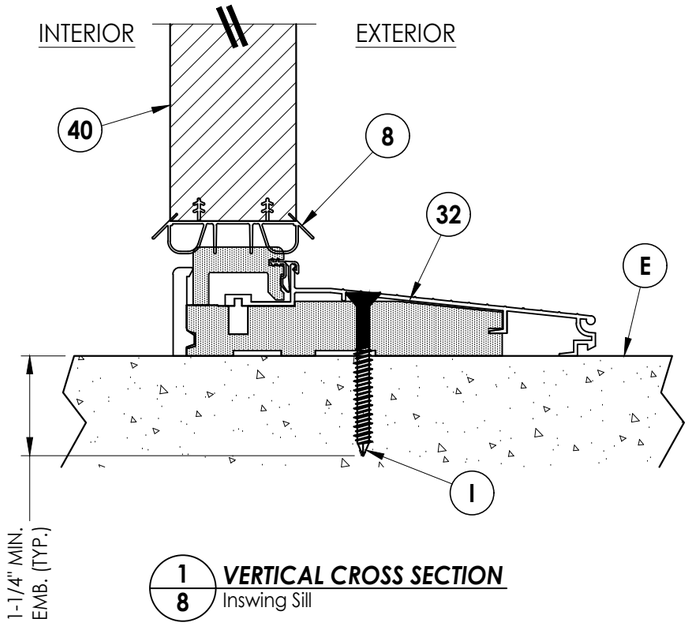

1/8 VERTICAL CROSS SECTION
Inswing Sill

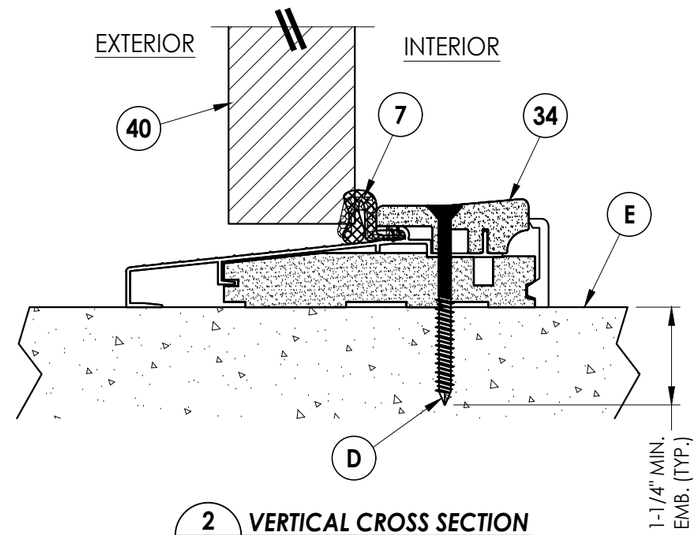

2/8 VERTICAL CROSS SECTION
Outswing Sill

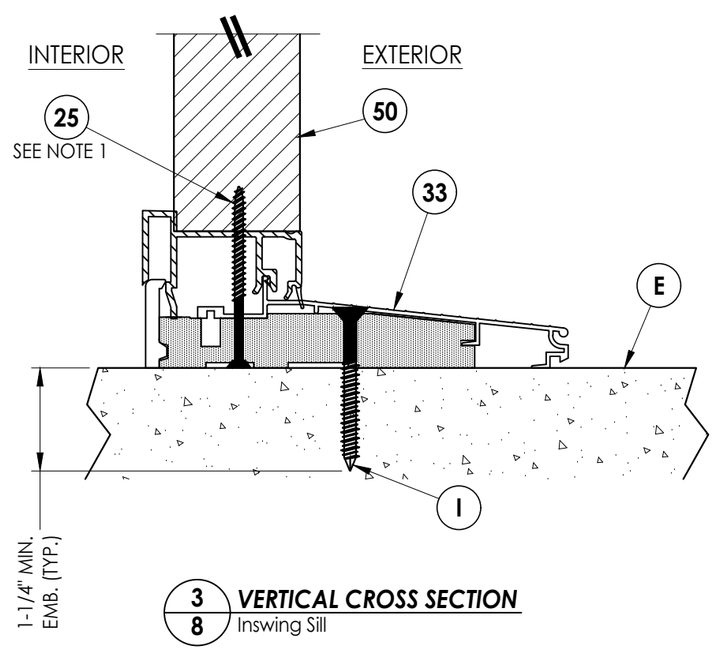

3/8 VERTICAL CROSS SECTION
Inswing Sill

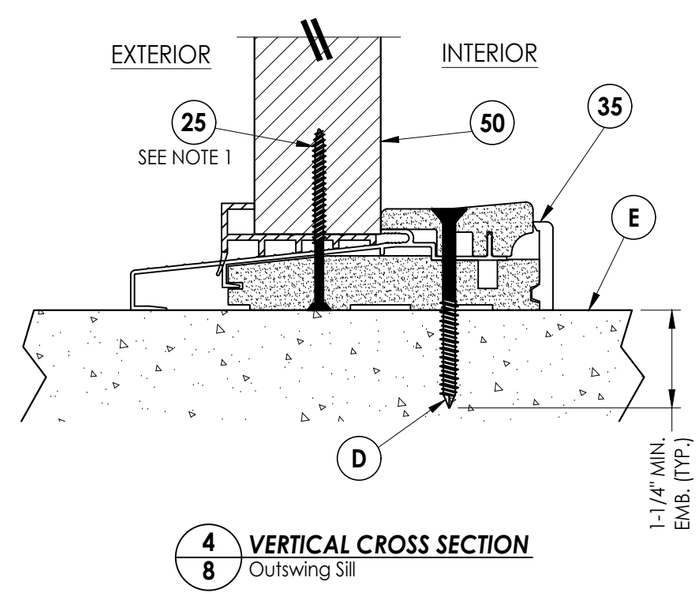

4/8 VERTICAL CROSS SECTION
Outswing Sill

Documents Prepared By:
Lyndon F. Schmidt
P.E. No. 43409

RW BUILDING CONSULTANTS, INC.
P.O. Box 230, Valrico, FL 33595
Phone No.: 813.659.9197
FBPE Registry No. 9813

PRODUCT: THERMA-TRU FIBERGLASS DOOR

PART OR ASSEMBLY: VERTICAL CROSS SECTIONS (THRESHOLDS)

NO.	DATE	REVISIONS	BY
2	7/27/23	UPDATE TO 8TH ED. (2023) FBC	LFS
1	7/15/20	UPDATE TO 7th ED (2020) FBC	LFS

DATE: 2/11/19
SCALE: N.T.S.
DWG. BY: MT
CHK. BY: LFS
DRAWING NO.: FL-28897.8
SHEET 8 OF 12

© 2019 R.W. Building Consultants Inc.

Z:\2023 FBC Drawings\Therma-Tru\FL-28897 R2\FL-28897.7-9.dwg

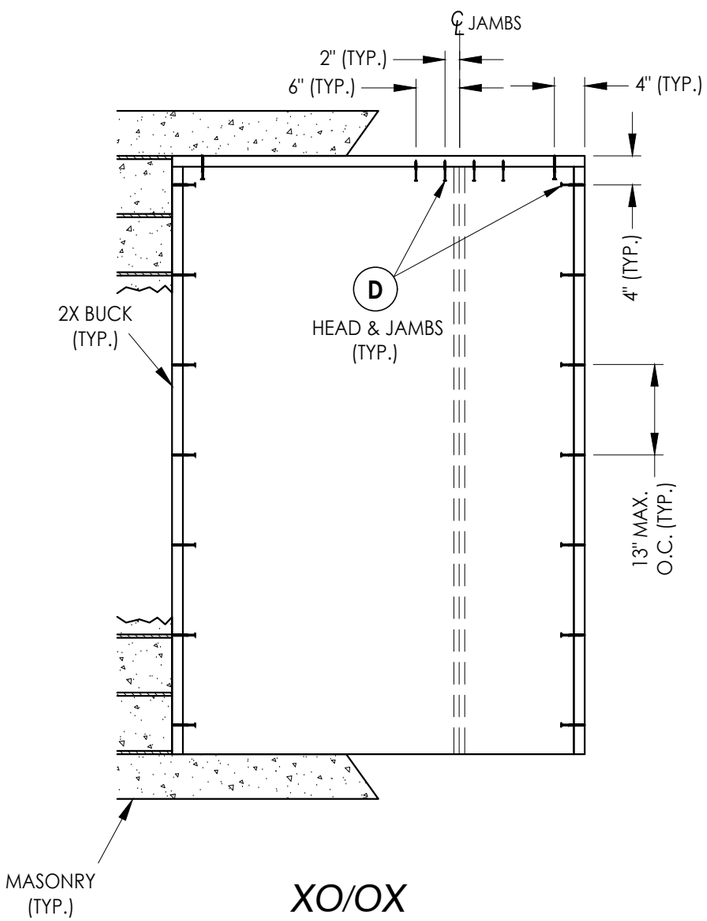

XO/OX

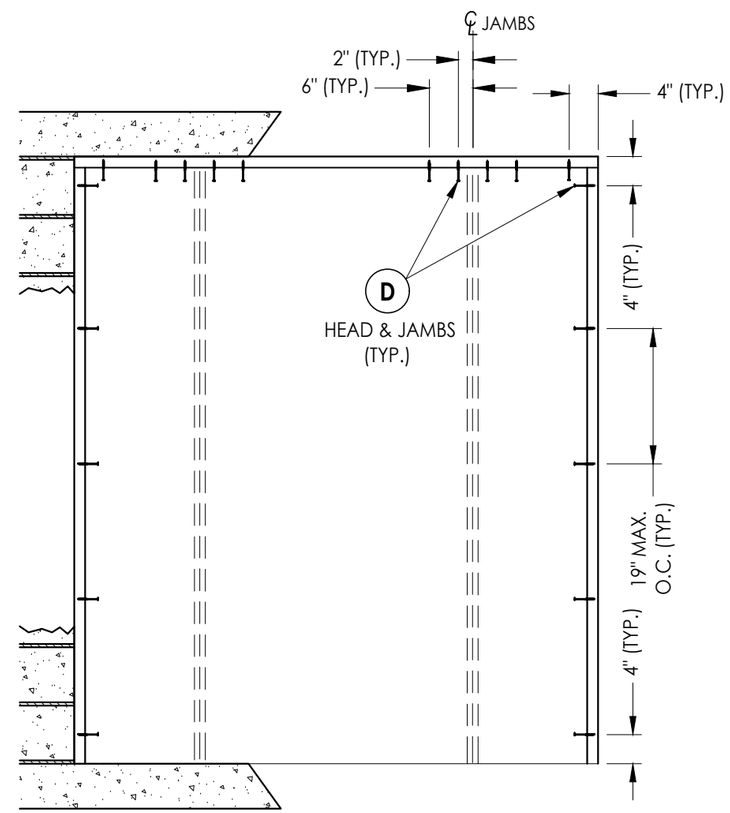

OXO

2X BUCK ANCHORING

Documents Prepared By:
Lyndon F. Schmidt
P.E. No. 43409

R.W. BUILDING CONSULTANTS, INC.
P.O. Box 230, Valrico, FL 33595
Phone No.: 813.659.9197
FBPE Registry No. 9813

PRODUCT: THERMA-TRU FIBERGLASS DOOR

PART OR ASSEMBLY: BUCK ANCHORING

NO.	DATE	REVISIONS	BY
2	7/27/23	UPDATE TO 8TH ED. (2023) FBC	LFS
1	7/15/20	UPDATE TO 7th ED (2020) FBC	LFS

DATE: 2/11/19
SCALE: N.T.S.
DWG. BY: MT
CHK. BY: LFS
DRAWING NO.: FL-28897.8
SHEET 9 OF 12

© 2019 R.W. Building Consultants Inc.

Z:\2023 FBC Drawings\Therma-Tru\FL-28897 R2\FL-28897.7-9.dwg

* FRAME CORNERS ATTACHED w/ (3) #8 X 2-1/2" FH DEEP THREAD WOOD SCREWS (TYP.)

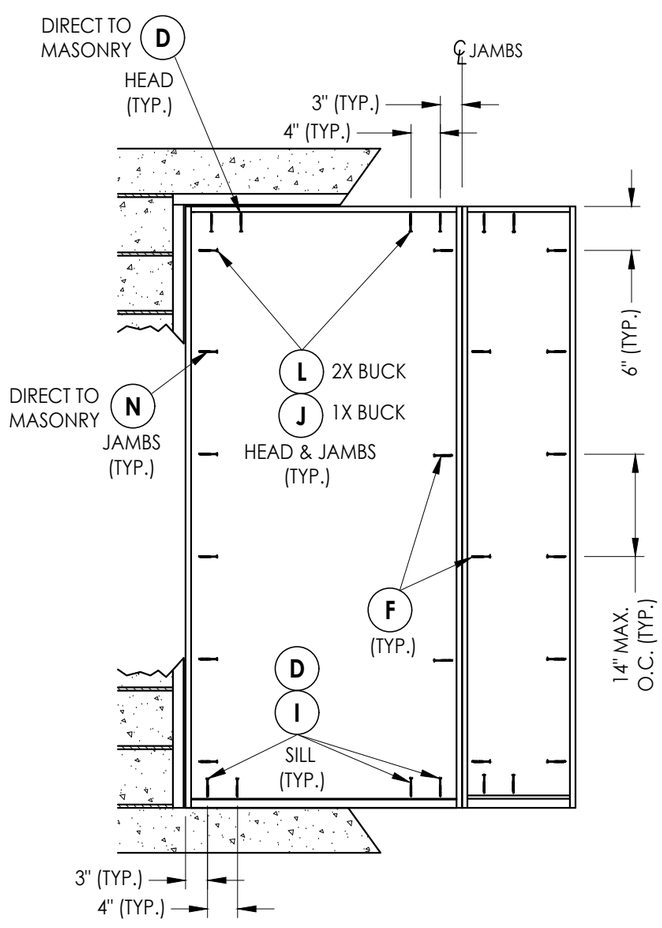

XO/OX

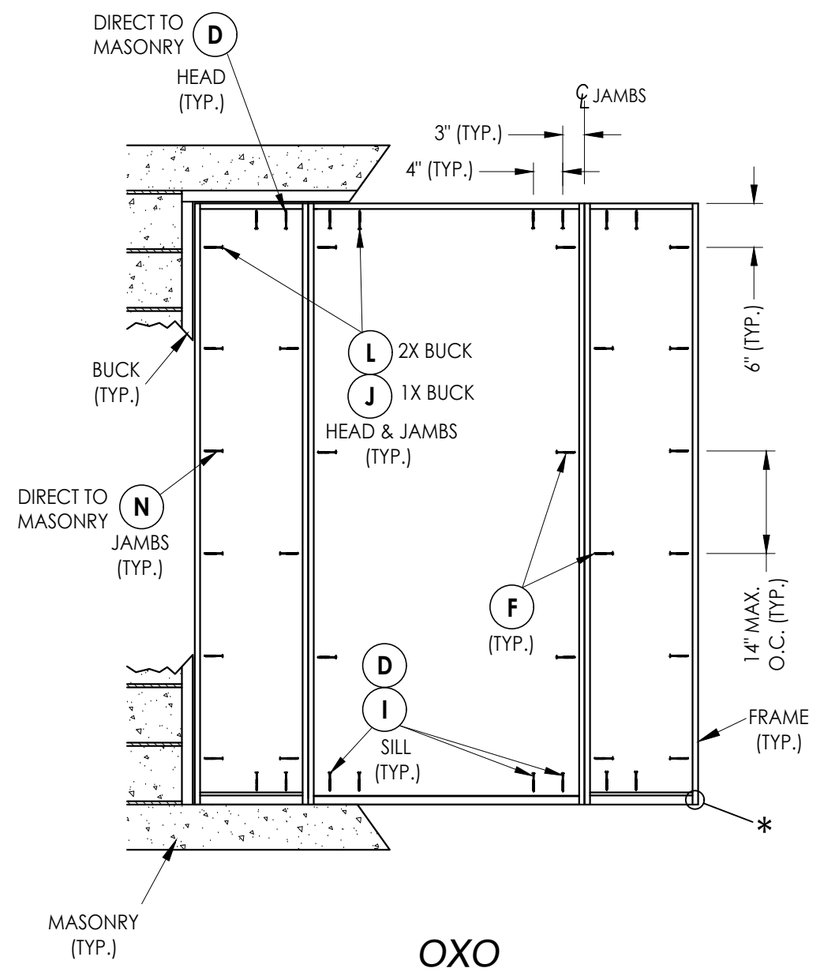

OXO

FRAME ANCHORING

Documents Prepared By:
Lyndon F. Schmidt
P.E. No. 43409
R.W. BUILDING CONSULTANTS, INC.
P.O. Box 230, Valrico, FL 33595
Phone No.: 813.659.9197
FBPE Registry No. 9813

PRODUCT: THERMA-TRU FIBERGLASS DOOR

PART OR ASSEMBLY: FRAME ANCHORING

NO.	DATE	REVISIONS	BY
2	7/27/23	UPDATE TO 8TH ED. (2023) FBC	LFS
1	7/15/20	UPDATE TO 7th ED (2020) FBC	LFS

DATE: 2/11/19
SCALE: N.T.S.
DWG. BY: MT
CHK. BY: LFS
DRAWING NO.: FL-28897.8
SHEET 10 OF 12

© 2019 R.W. BUILDING CONSULTANTS INC.

Z:\2023 FBC Drawings\Therma-Tru\FL-28897 R2\FL-28897.7-9.dwg

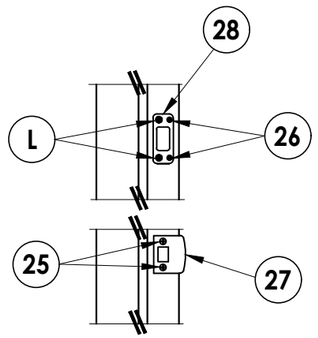

LATCH & DEADBOLT DETAIL
Kwikset

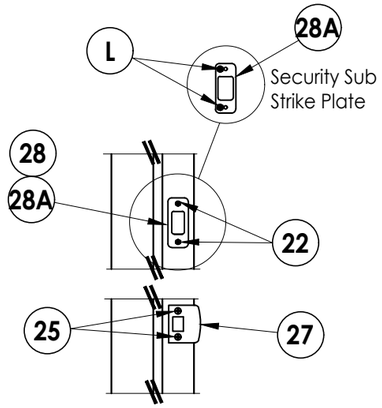

LATCH & DEADBOLT DETAIL
Schlage

LATCH & DEADBOLT STRIKE DETAILS

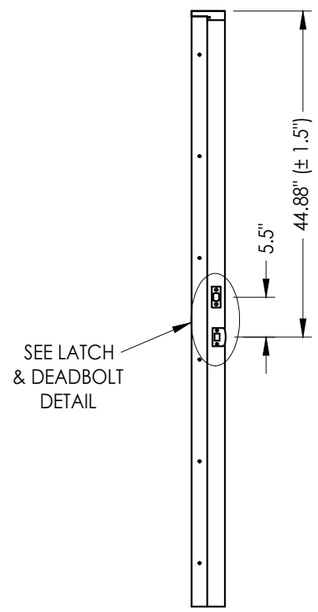

STRIKE JAMB
Latch and Deadbolt

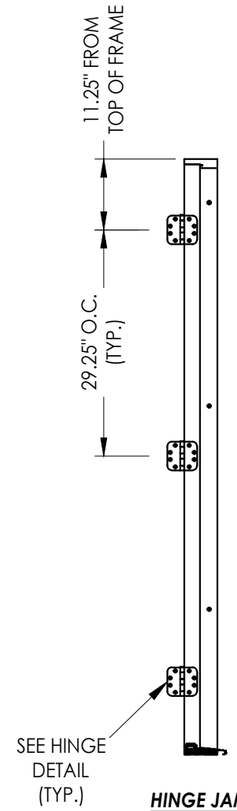

HINGE JAMB

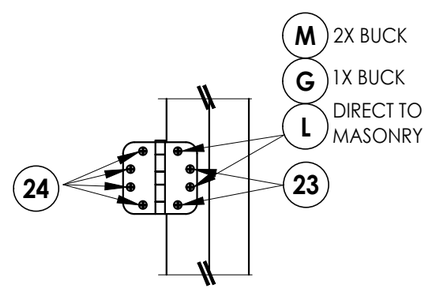

HINGE DETAIL

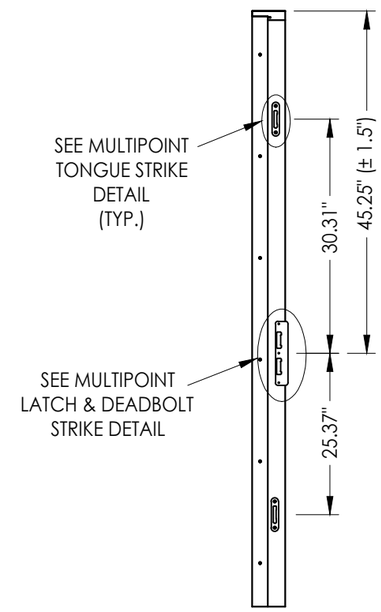

STRIKE JAMB
Multipoint Lock

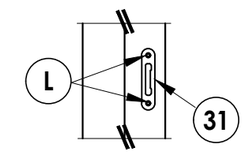

MULTIPOINT TONGUE STRIKE DETAIL

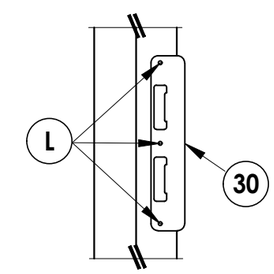

MULTIPOINT LATCH & DEADBOLT STRIKE DETAIL

MULTIPOINT LOCK STRIKE DETAILS

Documents Prepared By:
Lyndon F. Schmidt
P.E. No. 43409
RW BUILDING CONSULTANTS, INC.
P.O. Box 230, Valrico, FL 33595
Phone No.: 813.659.9197
FBPE Registry No. 9813

PRODUCT: THERMA-TRU FIBERGLASS DOOR

PART OR ASSEMBLY: HARDWARE DETAILS

REVISIONS

NO.	DATE		BY
2	7/27/23	UPDATE TO 8TH ED. (2023) FBC	LFS
1	7/15/20	UPDATE TO 7th ED (2020) FBC	LFS

DATE: 2/11/19
SCALE: N.T.S.
DWG. BY: MT
CHK. BY: LFS
DRAWING NO.: FL-28897.8
SHEET 11 OF 12

© 2019 R.W. Building Consultants Inc.

Z:\2023 FBC Drawings\Therma-Tru\FL-28897 R2\FL-28897.7-9.dwg

BILL OF MATERIALS

ITEM #	DESCRIPTION	MATERIAL
A	1X BUCK (G >= 0.42)	WOOD
B	2X BUCK (G >= 0.42)	WOOD
C	1/4" MAX. SHIM SPACE	-
D	1/4" X 2-3/4" PFH ELCO OR ITW CONCRETE SCREW	STEEL
E	MASONRY - 3,000 PSI MIN. CONCRETE CONFORMING TO ACI 301 OR HOLLOW BLOCK CONFORMING TO ASTM C90	CONCRETE
F	#10 X 2" PFH WOOD SCREW	STEEL
G	3/16" x 3-1/4" PFH ITW CONCRETE SCREW	STEEL
I	1/4" X 2-1/4" PFH ELCO OR ITW CONCRETE SCREW	STEEL
J	1/4" X 3-3/4" PFH ELCO OR ITW CONCRETE SCREW	STEEL
L	#10 X 2-1/2" PFH WOOD SCREW (1.15" MIN. EMBEDMENT)	STEEL
M	3/16" X 2-1/4" ITW CONCRETE SCREW	STEEL
N	3/16" X 2-3/4" ITW CONCRETE SCREW	STEEL
1	JAMB (FINGER JOINT PINE)	WOOD
7	WEATHERSTRIP	FOAM
8	DOOR SWEEP	VINYL
22	#8 X 3/4" PFH WOOD SCREW	STEEL
23	#10 X 3/4" PFH WOOD SCREW	STEEL
24	#10 X 1" PFH WOOD SCREW	STEEL
25	#8 X 2-1/2" PFH WOOD SCREW	STEEL
26	#8 X 5/8" PFH WOOD SCREW	STEEL
27	LATCH STRIKE PLATE	STEEL
28	DEADBOLT STRIKE PLATE	STEEL
28A	DEADBOLT SUB STRIKE PLATE	STEEL
29	4" X 4" HINGE	STEEL
30	MULTIPOINT LOCK STRIKE PLATE	STEEL
31	MULTIPOINT LOCK TONGUE STRIKE PLATE	STEEL
32	INSWING THRESHOLD	ALUM/COMP
33	INSWING THRESHOLD w/ SIDELITE ADAPTER	ALUM/COMP
34	OUTSWING THRESHOLD	ALUM/COMP
35	OUTSWING THRESHOLD w/ SIDELITE ADAPTER	ALUM/COMP
40	DOOR PANEL	-
50	SIDELITE PANEL	-
78	MULTIPOINT LOCK STRIKE PLATE @ HEAD	STEEL
79	MULTIPOINT LOCK STRIKE PLATE @ SILL	STEEL

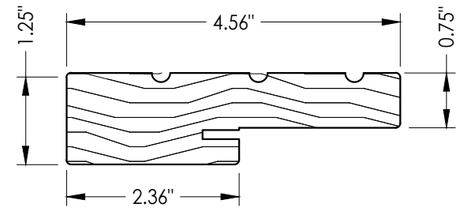

1 **WOOD JAMB**

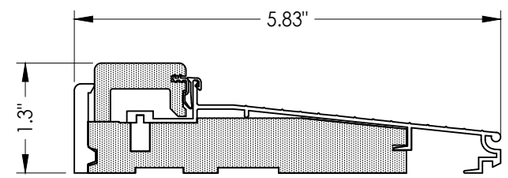

32 **INSWING THRESHOLD**
Adjustable Composite Sill

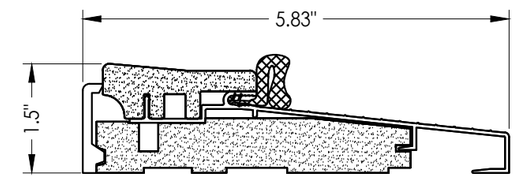

34 **OUTSWING THRESHOLD**
Composite Sill

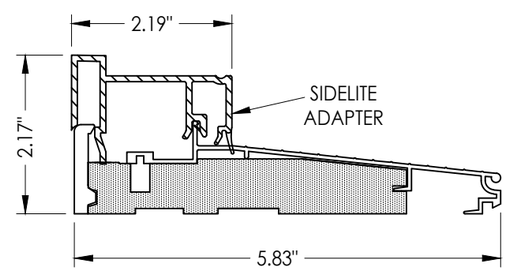

33 **INSWING THRESHOLD w/ SIDELITE ADAPTER**
Composite Sill

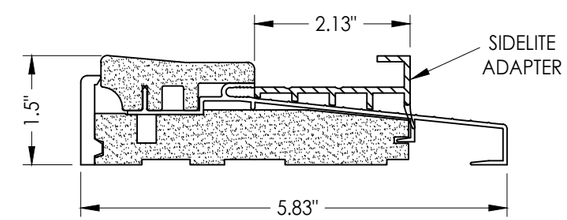

34 **OUTSWING THRESHOLD w/ SIDELITE ADAPTER**
Composite Sill

CONCRETE ANCHOR NOTES:

1. *Concrete anchor locations at the corners may be adjusted to maintain the min. edge distance to mortar joints.*
2. *Concrete anchor locations noted as "MAX. ON CENTER" must be adjusted to maintain the min. edge distance to mortar joints, additional concrete anchors may be required to ensure the "MAX. ON CENTER" dimension are not exceeded.*
3. *Concrete anchor table:*

ANCHOR TYPE	ANCHOR SIZE	MIN. EMBEDMENT	MIN. CLEARANCE TO MASONRY EDGE	MIN. CLEARANCE TO ADJACENT ANCHOR
ITW TAPCON®	1/4"	1-1/4"	2"	4"
ELCO ULTRACON®	1/4"	1-1/4"	1"	4"
ITW TAPCON®	3/16"	1-1/4"	AS SHOWN	1-1/2"

WOOD SCREW INSTALLATION NOTES:

1. *Maintain a minimum 5/8" edge distance, 1" end distance, & 1" o.c. spacing of wood screws to prevent the splitting of wood.*

Documents Prepared By:
Lyndon F. Schmidt
P.E. No. 43409
R.W. BUILDING CONSULTANTS, INC.
P.O. Box 230, Valrico, FL 33595
Phone No.: 813.659.9197
FBPE Registry No. 9813

PRODUCT: THERMA-TRU FIBERGLASS DOOR

PART OR ASSEMBLY: BILL OF MATERIALS

NO.	DATE	REVISIONS	BY
2	7/27/23	UPDATE TO 8TH ED. (2023) FBC	LFS
1	7/15/20	UPDATE TO 7th ED (2020) FBC	LFS

DATE: 2/11/19
SCALE: N.T.S.
DWG. BY: MT
CHK. BY: LFS
DRAWING NO.: FL-28897.8
SHEET 12 OF 12

© 2019 R.W. Building Consultants Inc.

Z:\2023 FBC Drawings\Therma-Tru\FL-28897 R2\FL-28897.7-9.dwg